1883310
King Four Poster Bed
Parts and Hardware List

A.	Headboard Posts	2 pcs
B.	Footboard Posts	2 pcs
C.	Headboard Panel	1 pc
D.	Footboard Rail	1 pc
E.	Fluted Posts	4 pcs
F.	Finials	4 pcs
G.	Side Rails	2 pcs
H.	Support Slats	4 pcs
I.	Center Support Slat	1 pc
J.	Leg Supports	3 pcs
K.	Short Allen Head Bolts	10 pcs
L.	Long Allen Head Bolts	4pcs
M.	Lock Washers	14 pcs
N.	Small Flat Washers	6 pcs
O.	Large Flat Washers	8 pcs
P.	Allen Head Wrench	1 pc
Q.	Phillips Head Screws	20 pcs
R.	Phillips Head Screwdriver	1 pc
S.	Plastic Caps	6 pcs

* Please make sure that you have all the parts and hardware indicated above before you begin assembly of this item.
* Use the hardware illustrations to determine correct piece and size.
* This item should be assembled on a soft surface to prevent scratching the finish during assembly.
* This item may require periodic tightening

1883310
King Four Poster Bed
Hardware Illustrations

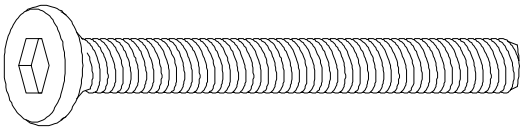

L. Long Allen Head Bolts

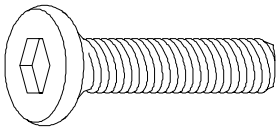

K. Short Allen Head Bolts

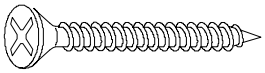

Q.Phillips Head Screws

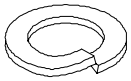

M. Lock Washers

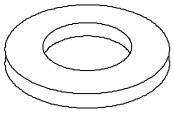

O. Large Flat Washers

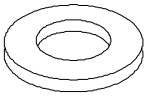

N. Small Flat Washers

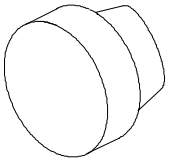

S. Plastic Caps

1883310
King Four Poster Bed

Attach the Headboard

Parts required

A.	Headboard Posts	2 pcs	N.	Small Flat Washers	6 pcs
C.	Headboard Panel	1 pc	P.	Allen Head Wrench	1 pc
K.	Short Allen Head Bolts	6 pcs	S.	Plastic Caps	6 pcs
M.	Lock Washers	6 pcs			

1. Insert the Headboard Panel (C) into the pre bored slots of the Headboard Posts (A). **Make sure the finished side of the Headboard Panel (C) is facing the same direction as the pre-cut slots for the Side Rails (G) on the bottom of the Headboard Posts (A).** Align the pre-threaded holes on the panel with pre-drilled holes on Headboard Posts (A). Secure with the Short Allen Head Bolts (K), Lock Washers (M) and Small Flat Washers (N) using Allen Head Wrench (P). Cover the pre-drilled holes on the Headboard Posts (A) with Plastic Caps (S). See illustration #1.

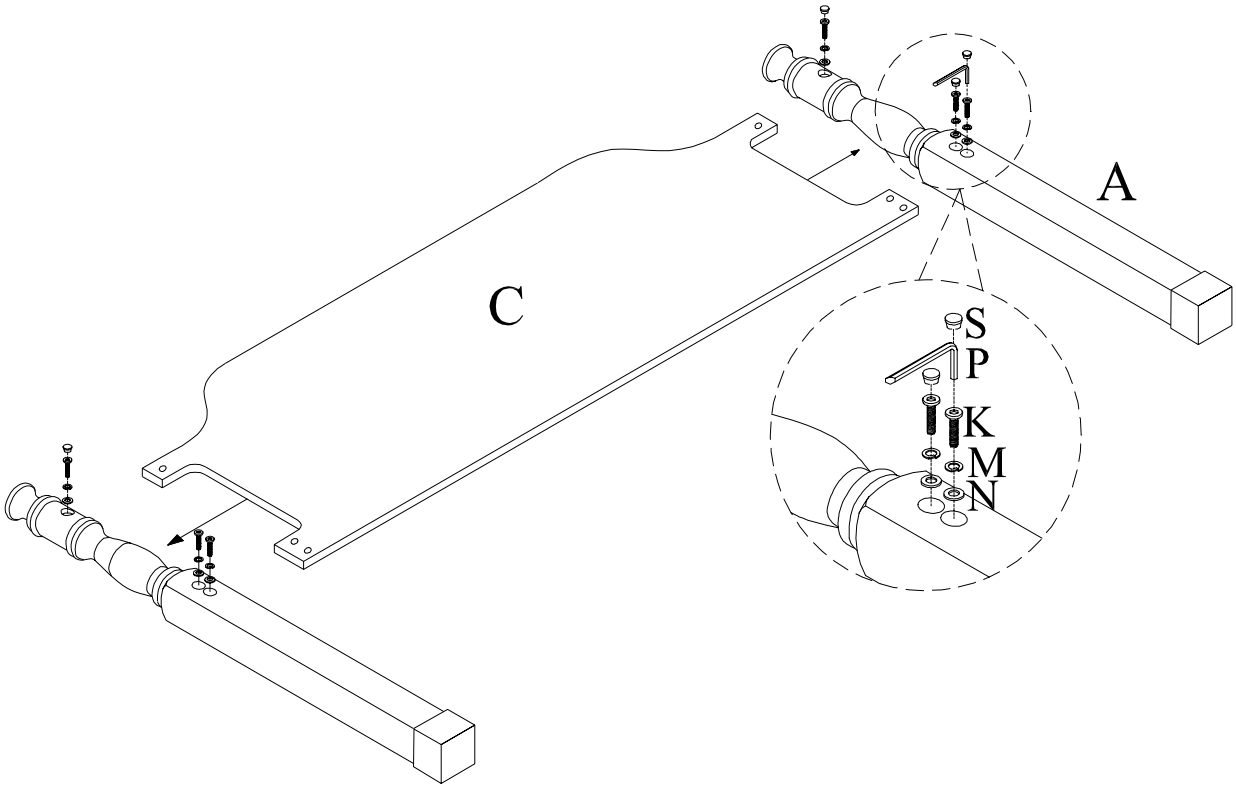

Illustration # 1

1883310
King Four Poster Bed

Assemble the Footboard

Parts required

B.	Footboard Posts	2 pcs	M.	Lock Washers	4 pcs
D.	Footboard Rail	1 pc	O.	Large Flat Washers	4 pcs
L.	Long Allen Head Bolts	4 pcs	P.	Allen Head Wrench	1 pc

2. Insert the Footboard Rail (D) into the pre bored slots of the Footboard Posts (B). Secure with Long Allen Head Bolts (L), Lock Washers (M) and Large Flat Washers (O) using Allen Head Wrench (P). See illustration #2.

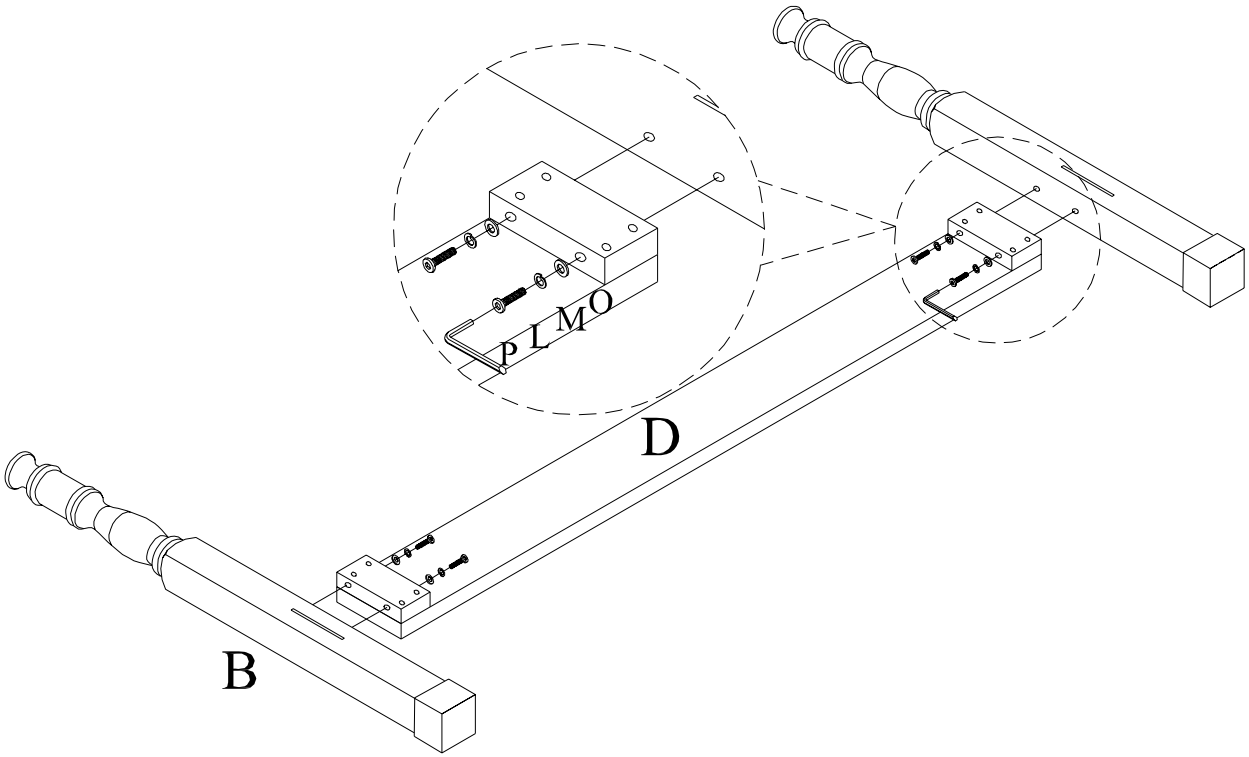

Illustration # 2

1883310
King Four Poster Bed

Assemble the Headboard & Footboard

Parts required

G.	Side Rails	2 pcs

3. **Attach the Side Rails (G)** Insert the exposed hooks of the Side Rail (G) into the pre-bored slots of the Headboard Post (A) and Footboard Post (B) and press down onto the pins in the Headboard Posts (A). **(Make sure that the hooks are all the way down onto the pins.)**

4. Repeat step 3 for the other side. See illustration #3.

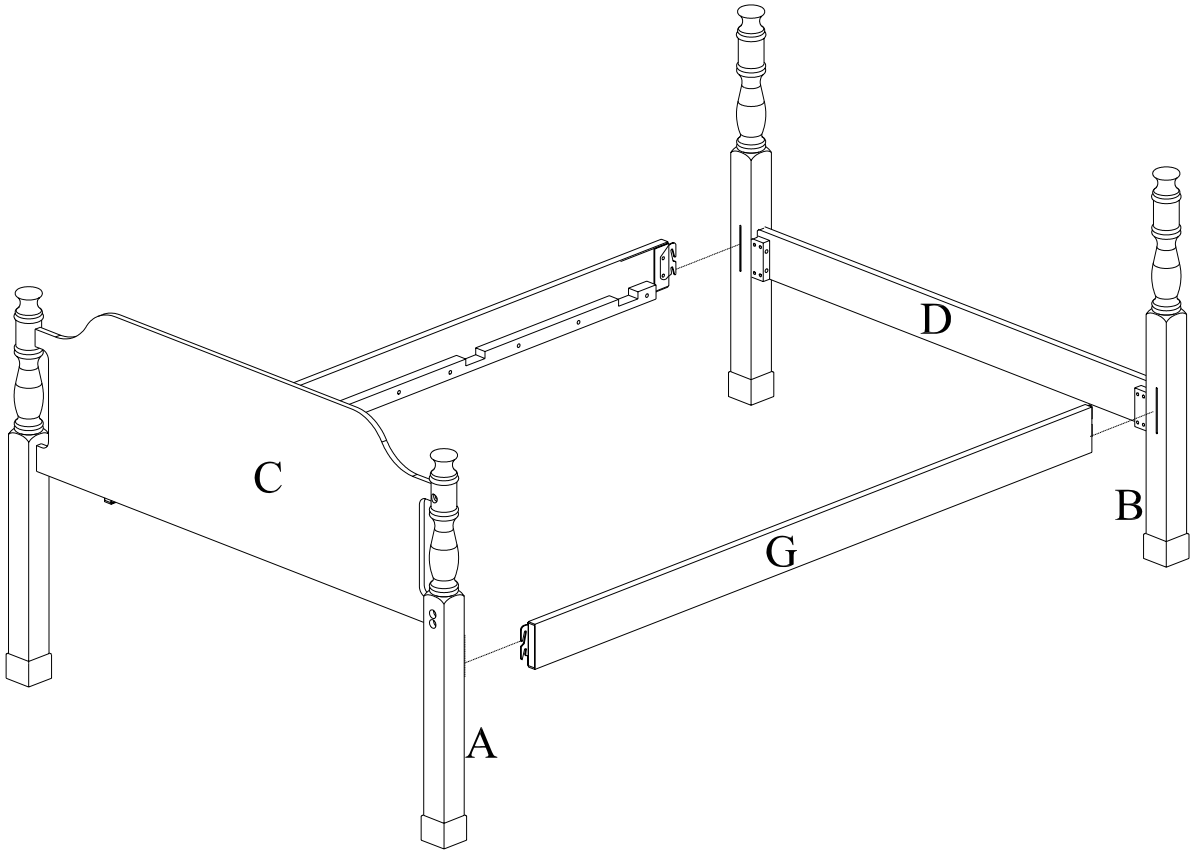

Illustration # 3

1883310
King Four Poster Bed

Assemble the Center Support Slat

Parts required

I.	Center Support Slat	1 pc	J.	Leg Supports	3 pcs

5. **Attach the Leg Supports (J)** Insert exposed threads in Leg Supports (J) into the pre-threaded holes in Center Support Slat (I). Secure by turning in a clockwise direction. See illustration #4.

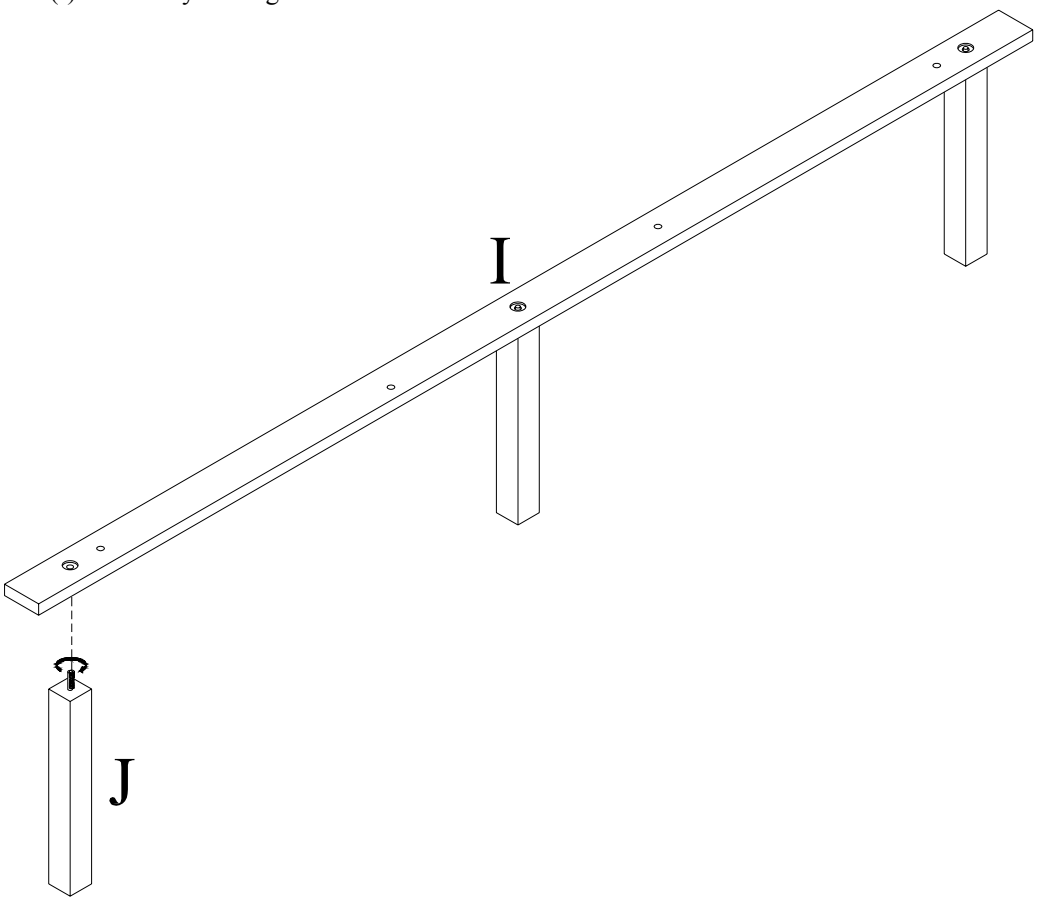

Illustration # 4

1883310
King Four Poster Bed

Assemble the Support Slats

Parts required

H.	Support Slats	4 pcs	O.	Large Flat Washers	8 pcs
P.	Allen Head Wrench	1 pc	Q.	Phillips Head Screws	20 pcs
K.	Short Allen Head Bolts	4 pcs	R.	Phillips Head Screwdriver	1 pc
M.	Lock Washers	4 pcs			

6. **Attach the Center Support Slat (I)** Align the pre-drilled holes in the Support Slats (H) with the pre-threaded holes in Center Support Slat (I). Secure using Short Allen Head Bolts (K), Lock Washers (M), Large Flat Washers (O) and Allen Head Wrench (P). See illustration #5.
7. **Attach the Support Slats (H)** Place the Support Slast (H) into the pre-cut slots on the cleat of Side Rails (G). Secure both sides of each Support Slat (H), using Phillips Head Screws (Q) with Phillips Head Screwdriver (R).
8. Secure the plate at end of Side Rails (G) to the Footboard Posts (B) and Headboard Posts (A) using Phillips Head Screws (Q) with Phillips Head Screwdriver (R). See illustration #5.

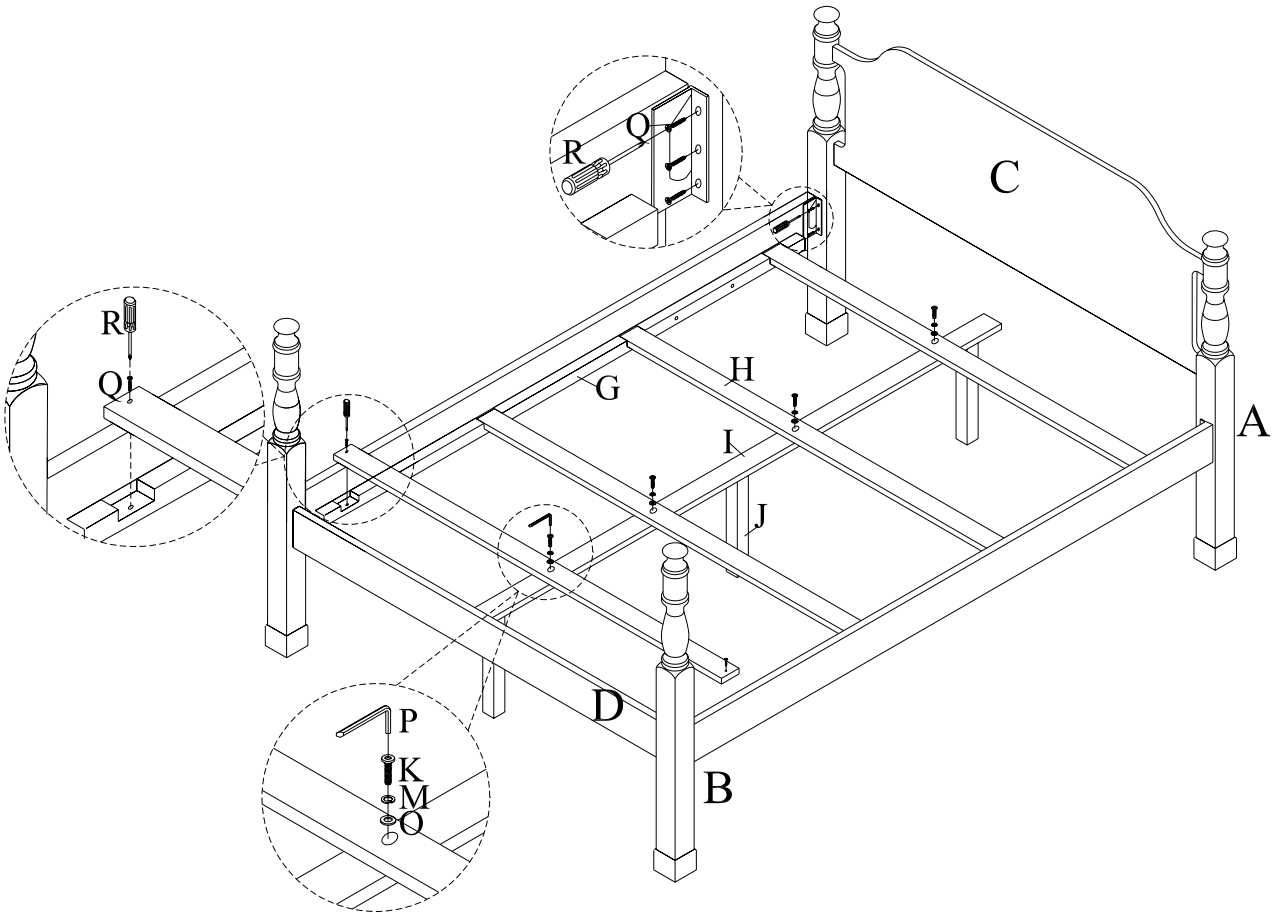

Illustration # 5

1883310
King Four Poster Bed

Assemble Posts

Parts required

E.	Fluted Posts	4 pcs	F.	Finials	4 pcs

9. Insert the exposed threads of the Fluted Posts (E) into the pre-threaded holes in Headboard Posts (A) and Footboard Posts (B). Secure by turning in a clockwise direction.

10. Place the Finial (F) on top of the exposed thread of Fluted Posts (E). Secure by turning in a clockwise direction. See illustration #6.

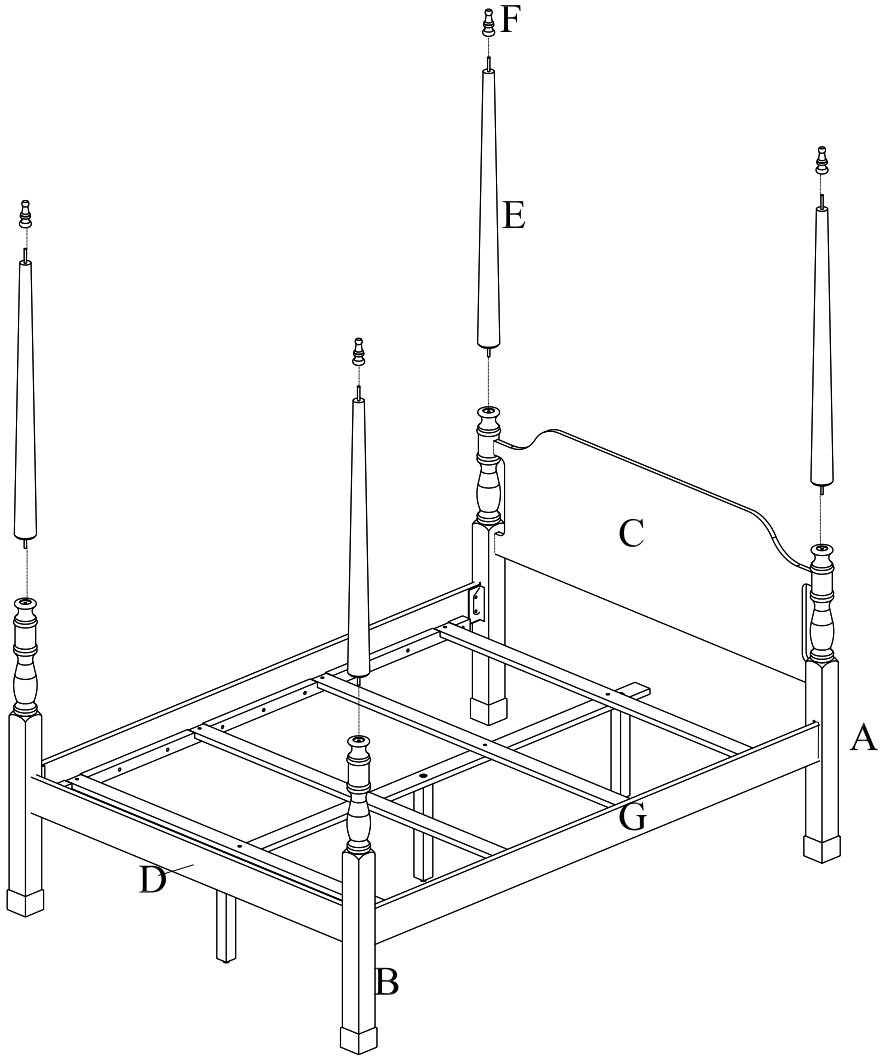

Illustration # 6